Product information sheet METRA 8 S

Item no. 513065

Benefits

- Young, straight-lined design
- Attractive line of sinks in the medium price category
- Particularly spacious bowls provide an unsurpassed amount of room
- The additional bowl provides a high degree of comfort
- Aesthetic low-profile rim design
- Can be installed reversibly

Colours

SILGRANIT™ PuraDur™ jasmine

Available colours:

black
anthracite
rock grey
alu metallic
pearl grey
white
jasmine
champagne
tartufo
coffee

Planning information

- Retrofit set for drain remote control is optionally available.
- Special fixing elements are required for undermount installation.

Scope of supply

- waste kit with space-saving pipe, 2 x 3 1/2" basket strainer

Details

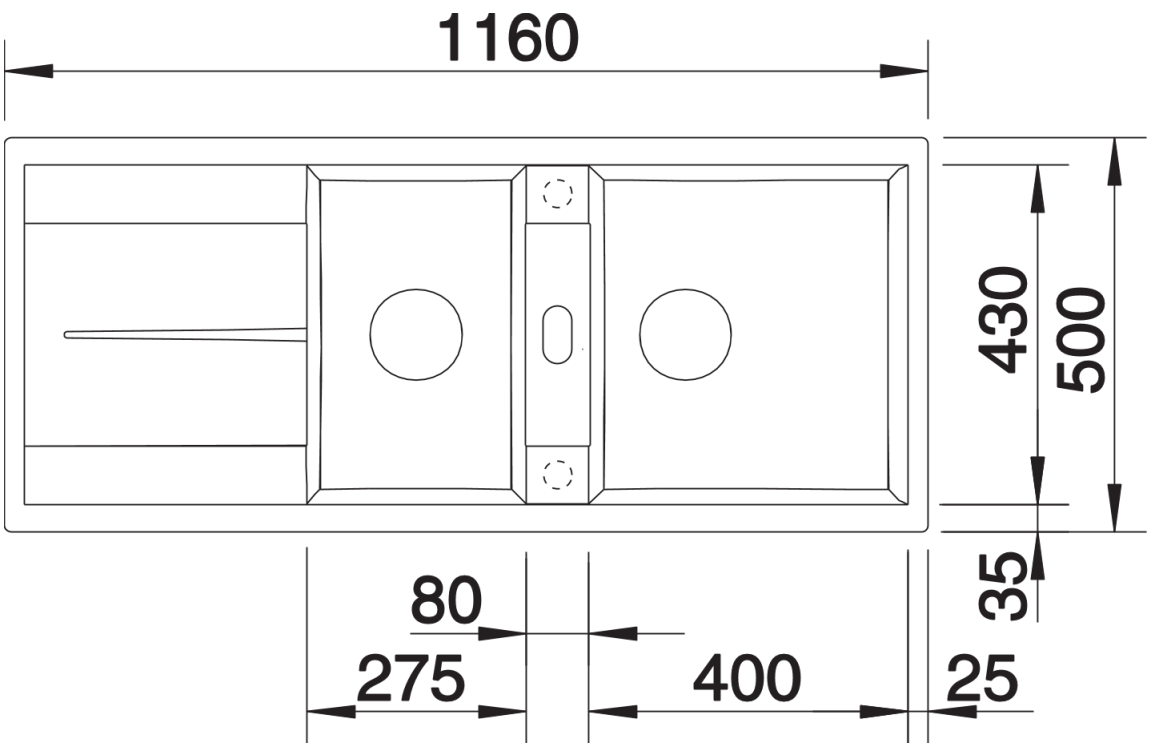

Top view

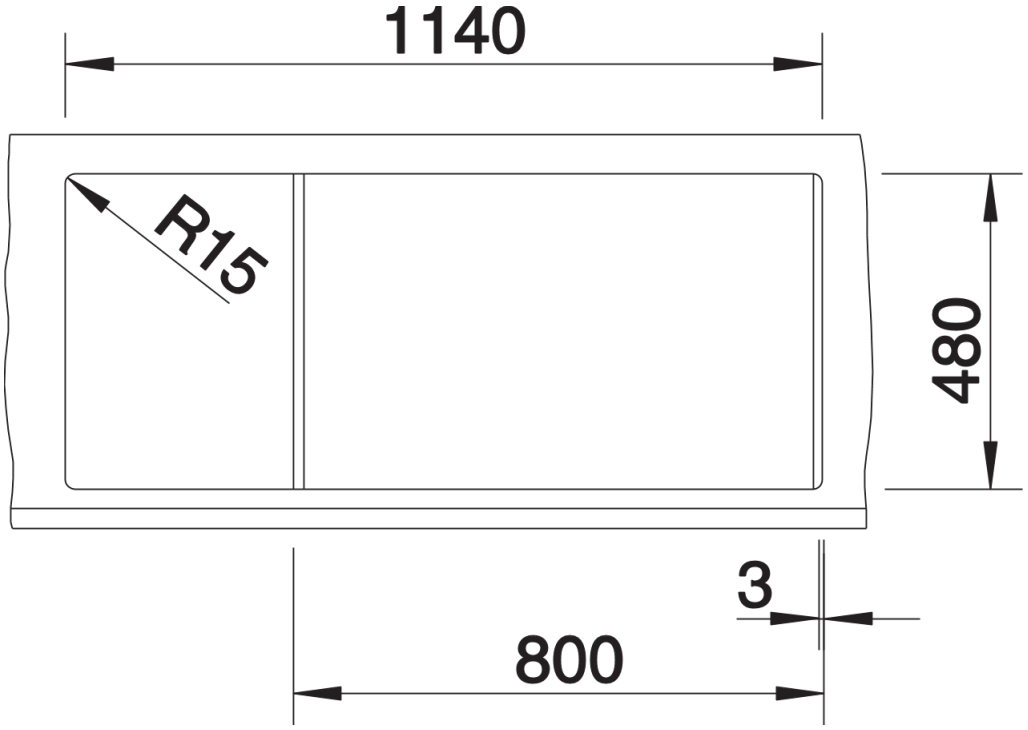

Cut-out

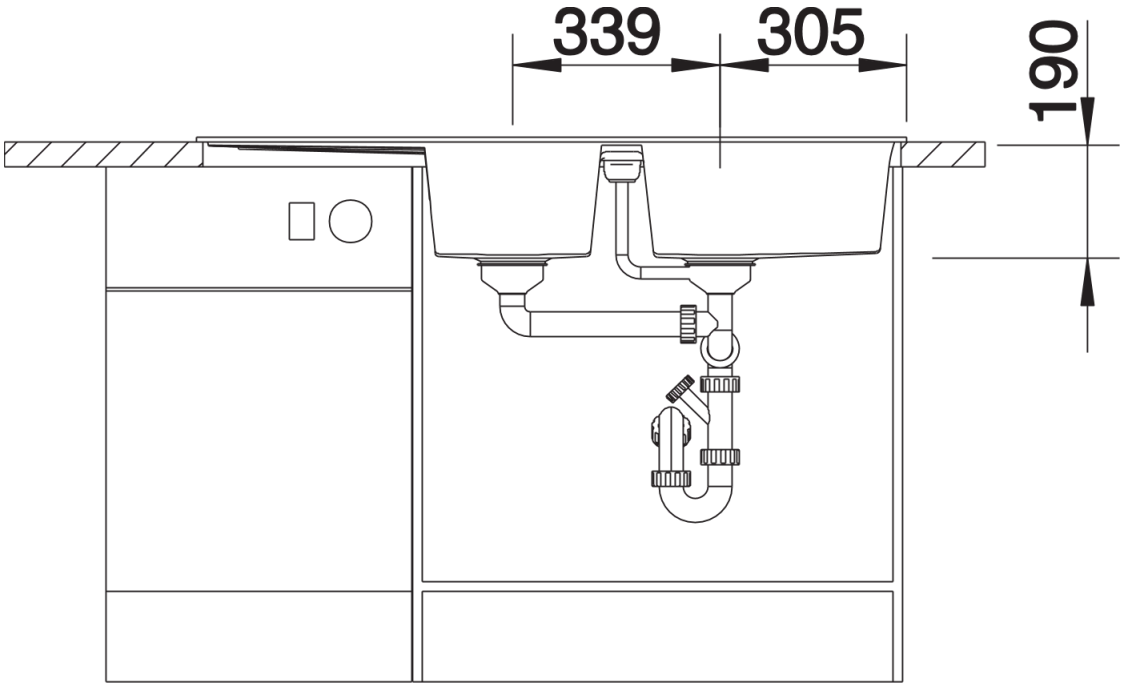

Front view

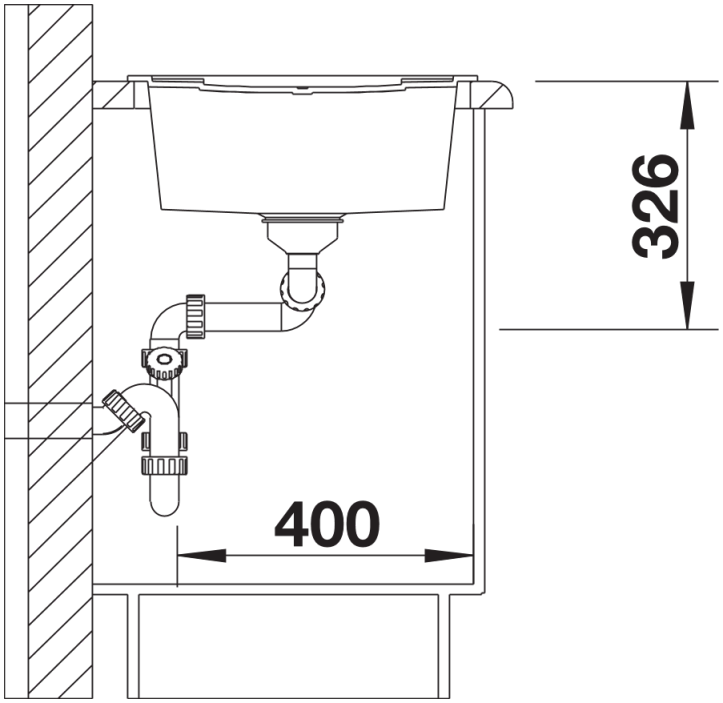

Side view